**Work Order ID 110862**
*January-08-14 12:36:22 PM*

*110862*

Page 1

**Item ID:** D4003-049
**Revision ID:**
**Item Name:** Tank Vent Line Assembly

**Accept** *N900040100*

**Setup** **Start** *NS1*
**Stop** *NS2*

**Start Date:** 1/08/14 **Start Qty:** 2.00 *2*
**Required Date:** 1/08/14 **Req'd Qty:** 2.00 *2*
**Reference:**

**Cust Item ID:**
**Customer:**

**Approvals:** **Process Plan:** ML5 **Date:** 14-01-09 **Tooling:** ________ **Date:** ________
**QC:** ________ **Date:** ________ **SPC (Y/N):** ________ **Date:** ________

**Run** **Start** *NR1*
**Stop** *NR2*

| **Draw Nbr** | **Revision Nbr** |
|---|---|
| D4003 | A |

| **Sequence ID/ Work Center ID** | **Operation Description** | **Set Up/ Run Hours** | **Tool ID** | **Tool #** | **Plan Code** | **Accept Qty** | **Reject Qty** | **Reject Number** | **Insp. Stamp** |
|---|---|---|---|---|---|---|---|---|---|
| 110<br>*110*<br>Small Fab<br>Small Fab | **Memo**<br>1- Form tube as per dwg D4003<br>2- Insert sleeve before flaring | 0.00<br>0.00 | | | | 2 | | FF | 28-01-14 |
| 120<br>*120*<br>QC<br>Quality Control | QC5- Inspect part completeness to step on W/O<br>**Memo** | 0.00<br>0.00 | DAS<br>27<br>9-89<br>14\|1\|28 | | | 2 | | | |
| 130<br>*130*<br>HandFinish<br>Hand Finishing | Chemical Conversion Coat per QSI005 4.1<br>**Memo** | 0.00<br>0.00 | | | | 2 | | 14-1-29 | |

**Work Order ID 110862** *110862* Page 2

*January-08-14 12:36:22 PM*

**Item ID:** D4003-049 **Accept** *N900040100* **Setup** **Start** *NS1*

**Revision ID:**

**Item Name:** Tank Vent Line Assembly **Stop** *NS2*

**Start Date:** 1/08/14 **Start Qty:** 2.00 *2* **Cust Item ID:**

**Required Date:** 1/08/14 **Req'd Qty:** 2.00 *2* **Customer:**

**Reference:**

**Run** **Start** *NR1*

**Stop** *NR2*

**Approvals:** **Process Plan:** ____________ **Date:** ________ **Tooling:** ____________ **Date:** ________

**QC:** ____________ **Date:** ________ **SPC (Y/N):** ________ **Date:** ________

| Sequence ID/ Work Center ID | Operation Description | Set Up/ Run Hours | Tool ID | Tool # | Plan Code | Accept Qty | Reject Qty | Reject Number | Insp. Stamp |
|---|---|---|---|---|---|---|---|---|---|
| 140<br>*140*<br>QC<br>Quality Control | QC7-Inspect Chemical Conversion Coat<br>**Memo** | 0.00<br>0.00 | | | | 2x | | | 14/01/29<br>DAS 36 9-89 |
| 150<br>*150*<br>Small Fab<br>Small Fab | **Memo**<br>Install nut as per dwg | 0.00<br>0.00 | | | | 2 | | | FF 29-01-14 |
| 160<br>*160*<br>QC<br>Quality Control | QC5- Inspect part completeness to step on W/O<br>**Memo** | 0.00<br>0.00<br>DAS 27 9-89<br>14/1/29 | | | | 2 | | | |

**Work Order ID** **110862**

*January-08-14 12:36:22 PM*

*110862*

| | | | | | | | |
|---|---|---|---|---|---|---|---|
| **Item ID:** | D4003-049 | | | **Accept** | *N900040100* | **Setup** **Start** | *NS1* |
| **Revision ID:** | | | | | | **Stop** | *NS2* |
| **Item Name:** | Tank Vent Line Assembly | | | | | | |
| **Start Date:** | 1/08/14 | **Start Qty:** 2.00 | *2* | **Cust Item ID:** | | | |
| **Required Date:** | 1/08/14 | **Req'd Qty:** 2.00 | *2* | **Customer:** | | | |
| **Reference:** | | | | | | | |

**Run** **Start** *NR1*

**Stop** *NR2*

**Approvals:** **Process Plan:** ______________ **Date:** __________ **Tooling:** ____________ **Date:** __________

**QC:** ______________________ **Date:** __________ **SPC (Y/N):** ____________ **Date:** __________

| **Sequence ID/ Work Center ID** | **Operation Description** | **Set Up/ Run Hours** | **Tool ID** | **Tool #** | **Plan Code** | **Accept Qty** | **Reject Qty** | **Reject Number** | **Insp. Stamp** |
|---|---|---|---|---|---|---|---|---|---|
| 170 | Identify as per dwg & Stock Location: ST243 | 0.00 | | | | | | | |
| *170*<br>Packaging | **Memo** | 0.00 | | | | 2 | | | DAS<br>33<br>~~9-99~~ 14-01-29 |
| Packaging | | | | | | | | | |
| 180 | QC21- Final Inspection - Work Order Release | 0.00 | | | | | | | |
| *180*<br>QC | **Memo** | 0.00 | | | | MCJ | 14-01-29 | | |
| Quality Control | | | | | | | | | |

MCJ 14-01-29

# Picklist Print

*January-08-14 12:36:22 PM*

1

| | | | | | |
|---|---|---|---|---|---|
| **Work Order ID:** | **110862** | | | | |
| **Parent Item:** | **D4003-049** | **Start Date:** | 1/08/14 | **Required Date:** | 1/08/14 |
| **Parent Item Name:** | Tank Vent Line Assembly | **Start Qty:** | 2.00 | **Required Qty:** | 2.00 |

**Comments:** IPP rev A 10.01.05 new Issue Prelim EC verified by: DD IPP Rev B 10.05.13 ecn 10-562
EC verified by:DD IPP REV:C 13.04.17 NOW MADE IN HOUSE DD VERF:JLM

| Component Item ID/ Item Name | Replacement Item ID | Mfg/ Purch | Bin Item | Primary Location | Last Location | Route Seq ID | Unit of Measure | Qty on Hand | Qty per Kit | Total Qty | Qty Issued | Date Issued | Status |
|---|---|---|---|---|---|---|---|---|---|---|---|---|---|
| **AN818-8D**<br>Nut | | Purchased | No | | | | Each | 35.0000 | | 2 | FF | 28-01-14 | |

| Location | Loc Qty | Loc Code | |
|---|---|---|---|
| ST348 | 3 | | |
| m126474 | 3 | | 2 |
| ST551 | 32 | | |
| m114523 | 12 | | |
| m127044 | 20 | | |

| Component Item ID/ Item Name | Replacement Item ID | Mfg/ Purch | Bin Item | Primary Location | Last Location | Route Seq ID | Unit of Measure | Qty on Hand | Qty per Kit | Total Qty | Qty Issued | Date Issued | Status |
|---|---|---|---|---|---|---|---|---|---|---|---|---|---|
| **M6061T6T0.500W.035**<br>6061-T6 RD Tube .500 x.035W | | Purchased | No | | | | f | 114.0000 | | 3 | FF | 28-01-14 | |

| Location | Loc Qty | Loc Code | |
|---|---|---|---|
| MAT014 | 114 | | |
| 121848 | 48 | | |
| M127417 | 66 | | 3 |

| Component Item ID/ Item Name | Replacement Item ID | Mfg/ Purch | Bin Item | Primary Location | Last Location | Route Seq ID | Unit of Measure | Qty on Hand | Qty per Kit | Total Qty | Qty Issued | Date Issued | Status |
|---|---|---|---|---|---|---|---|---|---|---|---|---|---|
| **MS20819-8D**<br>Sleeve | | Purchased | No | | | | Each | 24.0000 | | 2 | FF | 28-01-14 | |

| Location | Loc Qty | Loc Code | |
|---|---|---|---|
| ST312 | 24 | | |
| m126275 | 24 | | 2 |

| ITEM NO. | QTY. -049 | PART NUMBER | DESCRIPTION | JOHN CAMERON AVIATION PART NUMBER |
|---|---|---|---|---|
| 1 | X | D4003-049 | TANK VENT LINE ASSEMBLY | JCA-M47-2-17 |
| | | | | |
| 2 | 1 | D4003-9 | VENT LINE | |
| 3 | 1 | AN818-8D | NUT | |
| 4 | 1 | MS20819-8D | SLEEVE | |

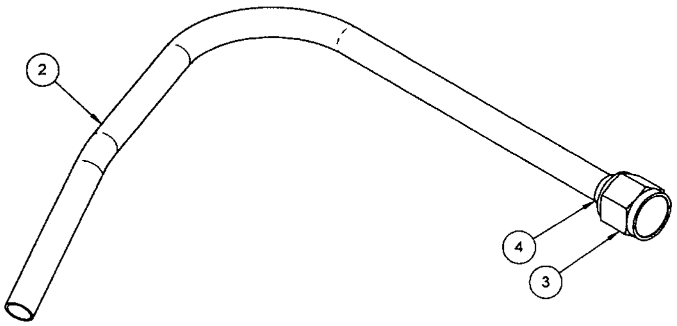

110862 MLJ
14-01-09

D4003-049 TANK VENT LINE ASSEMBLY

RELEASED
2010 -05- 05
MP

NOTES:
1) MATERIAL: N/A
2) FINISH: N/A
3) TOLERANCES: PER DART QSI 018 UNLESS OTHERWISE NOTED
4) UNITS: INCHES UNLESS OTHERWISE NOTED
5) BREAK SHARP EDGES: 0.005 TO 0.010 MAX
6) IDENTIFICATION: IDENTIFY WITH DART P/N "D4003-049" AND B/N USING FINE POINT PERMANENT INK MARKER
7) WEIGHT: 0.11 lbs

| | | |
|---|---|---|
| DESIGN | | **DART AEROSPACE LTD**<br>HAWKESBURY, ONTARIO, CANADA |
| DRAWN | | |
| CHECKED | | DRAWING NO.<br>D4003<br>REV. A<br>SHEET 2 OF 9 |
| MFG. APPR. | | |
| APPROVED | | TITLE<br>LINE<br>SCALE<br>NTS |
| DE APPR. | | |
| DATE | 10.02.05 | |

COPYRIGHT © 2010 BY DART AEROSPACE LTD
THIS DOCUMENT IS PRIVATE AND CONFIDENTIAL AND IS SUPPLIED ON THE EXPRESS CONDITION THAT IT IS NOT TO BE USED FOR ANY PURPOSE OR COPIED OR COMMUNICATED TO ANY OTHER PERSON WITHOUT WRITTEN PERMISSION FROM DART AEROSPACE LTD.

DQA: __________ Date: __________

# WORK ORDER NON-CONFORMANCE / UPDATE

DART AEROSPACE

QA Closed: Date:

Work Order update only ☐

Work Order: ____________________

Part No. ____________________

NCR No. ____________________

**DISPOSITION**

- Rework ☐
- Scrap ☐
- Use-as-is ☐
- Suspected Unapproved ☐

**AGAINST DEPARTMENT/PROCESS**

- Skid-tube ☐
- Machining ☐
- Thermoforming ☐
- Large Fab ☐
- Crosstube ☐
- Small Fab ☐
- Finishing ☐
- Composite ☐
- Water Jet ☐
- Prod. Eng. Coor. ☐
- Rec/Store/Packaging ☐
- Supplier ☐
- Engineering ☐
- Quality ☐
- Other ☐
- ☐

| Root Cause | Date | Step | Qty | Description of work order update or non-conformance | Initial Chief Eng | Action Description | Sign & Date | Verification | QC Inspector |
|---|---|---|---|---|---|---|---|---|---|
| Design ☐ | | | | | | | | | |
| Doc/Data ☐ | | | | | | | | | |
| Equip/Tooling ☐ | | | | | | | | | |
| Handling/Pre ☐ | | | | | | | | | |
| Material ☐ | | | | | | | | | |
| Operator ☐ | | | | | | | | | |
| Offset/Setup ☐ | | | | | | | | | |
| Process ☐ | | | | | | | | | |
| Supplier ☐ | | | | | | | | | |
| Training ☐ | | | | | | | | | |
| Transport ☐ | | | | | | | | | |
| Unapproved ☐ | | | | | | | | | |

## FAULT CATEGORY

**Landing Gear**

- ☐ Bending
- ☐ Centre Not Concentric
- ☐ Cracks
- ☐ Crimp/Kink/Ripple/Wave
- ☐ Cuffs
- ☐ Crushing
- ☐ Heat Treat
- ☐ Inspection Strip in Tube
- ☐ Marks/Chatter
- ☐ Turning Sequence
- ☐ Wave/Twist in Tube

**General**

- ☐ Bend
- ☐ BOM/Route
- ☐ Broken/Damage/Defect
- ☐ Burrs
- ☐ Contamination
- ☐ Countersink
- ☐ Cut Too Short
- ☐ Drawing
- ☐ Drill Holes
- ☐ Finish
- ☐ Fit/Function
- ☐ Folio/Program
- ☐ Grain
- ☐ Hardware
- ☐ Inspection Incomplete/Unqualified
- ☐ Instructions Incomplete/Unclear
- ☐ Misaligned/off center
- ☐ Mislabeled
- ☐ Misread
- ☐ Off-set
- ☐ Out of Calibration
- ☐ Out of Sequence
- ☐ Outside Dimensions
- ☐ Over/Under tolerance
- ☐ Part Incorrect
- ☐ Part Lost/Missing
- ☐ Part Moved
- ☐ Positioned Wrong
- ☐ Power Loss/Surge
- ☐ Pressure/Forced
- ☐ Set-up
- ☐ Temperature/Cure
- ☐ Weld
- ☐ Wrong Stock Pulled
- ☐ Other

H:/FORMS/Quality Assurance\approved QA/NCRWO RevH

| DART AEROSPACE PART NUMBER | JOHN CAMERON AVIATION PART NUMBER |
|---|---|
| D4003-9 | REF JCA-M47-2-17 |

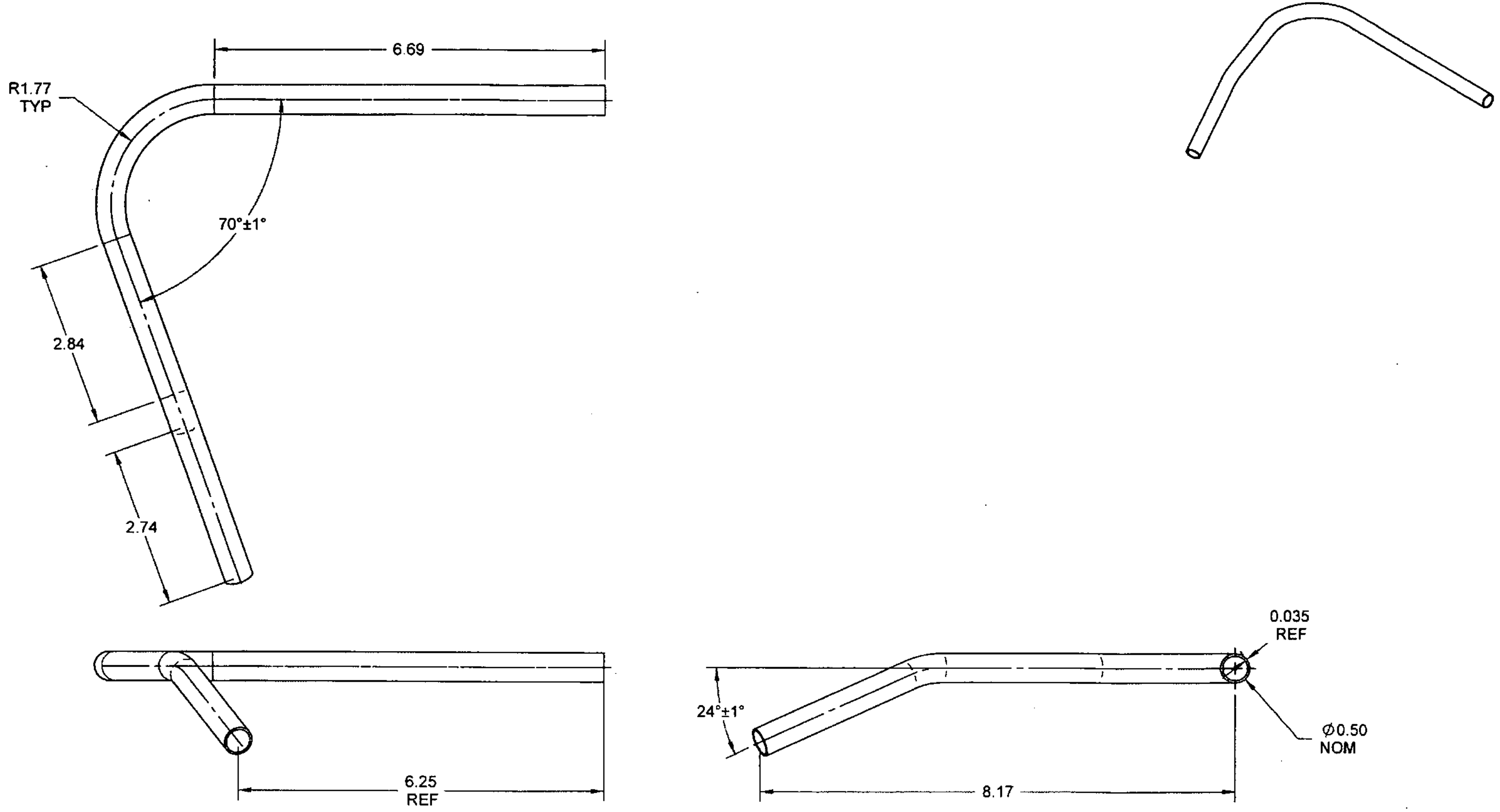

**D4003-9 VENT LINE**

RELEASED
2010-05-05
MP

NOTES:
1) MATERIAL: 6061-T6 OR 6061-T62 ALUMINUM TUBING, ⌀0.500 X 0.035 WALL THICKNESS PER WW-T-700/6 OR AMS 4080 OR AMS 4082 OR QQ-A-200/8 OR QQ-A-225/8 REF DART SPEC M6061T60.500W.035
2) FINISH: CHEMICAL CONVERSION COAT PER DART QSI 005 4.1
3) TOLERANCES: PER DART QSI 018 UNLESS OTHERWISE NOTED
4) UNITS: INCHES UNLESS OTHERWISE NOTED
5) BREAK SHARP EDGES: 0.005 TO 0.010 MAX
6) IDENTIFICATION: N/A
7) WEIGHT: 0.08 lbs

| | |
|---|---|
| DESIGN | |
| DRAWN | |
| CHECKED | |
| MFG. APPR. | |
| APPROVED | |
| DE APPR. | |
| DATE | 10.02.05 |

**DART AEROSPACE LTD**
HAWKESBURY, ONTARIO, CANADA

DRAWING NO. D4003
REV. A
SHEET 7 OF 9
TITLE LINE
SCALE NTS

COPYRIGHT © 2010 BY DART AEROSPACE LTD
THIS DOCUMENT IS PRIVATE AND CONFIDENTIAL AND IS SUPPLIED ON THE EXPRESS CONDITION THAT IT IS NOT TO BE USED FOR ANY PURPOSE OR COPIED OR COMMUNICATED TO ANY OTHER PERSON WITHOUT WRITTEN PERMISSION FROM DART AEROSPACE LTD.

DQA: ____________ Date: ____________

DART AEROSPACE

# WORK ORDER NON-CONFORMANCE / UPDATE

QA Closed: Date:

Work Order update only ☐

Work Order: ____________________

Part No. ____________________

NCR No. ____________________

**DISPOSITION**

- Rework ☐
- Scrap ☐
- Use-as-is ☐
- Suspected Unapproved ☐

**AGAINST DEPARTMENT/PROCESS**

- Skid-tube ☐
- Machining ☐
- Thermoforming ☐
- Large Fab ☐
- Crosstube ☐
- Small Fab ☐
- Finishing ☐
- Composite ☐
- Water Jet ☐
- Prod. Eng. Coor. ☐
- Rec/Store/Packaging ☐
- Supplier ☐
- Engineering ☐
- Quality ☐
- Other ☐
- ☐

| Root Cause | | Date | Step | Qty | Description of work order update or non-conformance | Initial Chief Eng | Action Description | Sign & Date | Verification | QC Inspector |
|---|---|---|---|---|---|---|---|---|---|---|
| Design | ☐ | | | | | | | | | |
| Doc/Data | ☐ | | | | | | | | | |
| Equip/Tooling | ☐ | | | | | | | | | |
| Handling/Pre | ☐ | | | | | | | | | |
| Material | ☐ | | | | | | | | | |
| Operator | ☐ | | | | | | | | | |
| Offset/Setup | ☐ | | | | | | | | | |
| Process | ☐ | | | | | | | | | |
| Supplier | ☐ | | | | | | | | | |
| Training | ☐ | | | | | | | | | |
| Transport | ☐ | | | | | | | | | |
| Unapproved | ☐ | | | | | | | | | |

## FAULT CATEGORY

**Landing Gear**

- ☐ Bending
- ☐ Centre Not Concentric
- ☐ Cracks
- ☐ Crimp/Kink/Ripple/Wave
- ☐ Cuffs
- ☐ Crushing
- ☐ Heat Treat
- ☐ Inspection Strip in Tube
- ☐ Marks/Chatter
- ☐ Turning Sequence
- ☐ Wave/Twist in Tube

**General**

- ☐ Bend
- ☐ BOM/Route
- ☐ Broken/Damage/Defect
- ☐ Burrs
- ☐ Contamination
- ☐ Countersink
- ☐ Cut Too Short
- ☐ Drawing
- ☐ Drill Holes
- ☐ Finish
- ☐ Fit/Function
- ☐ Folio/Program
- ☐ Grain
- ☐ Hardware
- ☐ Inspection Incomplete/Unqualified
- ☐ Instructions Incomplete/Unclear
- ☐ Misaligned/off center
- ☐ Mislabeled
- ☐ Misread
- ☐ Off-set
- ☐ Out of Calibration
- ☐ Out of Sequence
- ☐ Outside Dimensions
- ☐ Over/Under tolerance
- ☐ Part Incorrect
- ☐ Part Lost/Missing
- ☐ Part Moved
- ☐ Positioned Wrong
- ☐ Power Loss/Surge
- ☐ Pressure/Forced
- ☐ Set-up
- ☐ Temperature/Cure
- ☐ Weld
- ☐ Wrong Stock Pulled
- ☐ Other

______________________________

______________________________

______________________________

H:/FORMS/Quality Assurance\approved QA/NCRWO RevH

# DART AEROSPACE LTD

DART AEROSPACE

| | | | |
|---|---|---|---|
| **Description:** Tank Vent Line Assembly | | **Work Order:** | 110862 |
| **Inspection Drawing:** D4003 | **Rev:** A | **Part Number:** | D4003-049 |

## INSPECTION SHEET

| Drawing Dimension | Tolerance | Actual Dimension | Accept | Reject | Method of Inspection | Comments |
|---|---|---|---|---|---|---|
| 6.69 | | 6.69 | ✓ | | S Fab-09 | |
| R. 1.77 | | R. 1.77 | ✓ | | S Fab-05 | |
| 2.84 | | 2.84 | ✓ | | S. Fab-09 | |
| 2.74 | | 2.74 | ✓ | | S. Fab-09 | |
| 6.25 | | 6.25 | ✓ | | S. Fab-07 | |
| 8.17 | | 8.17 | ✓ | | S Fab-09 | |
| 24° | | 24° | ✓ | | S Fab.05 | |
| 0.50 NOM | | 0.50 | ✓ | | S. Fab-14 | |
| 70° | | 70° | ✓ | | S Fab-05 | |

| | | | |
|---|---|---|---|
| **Measured by:**<br>Date 28-01-14 | **Checked By:** DAS 30 9-89<br>Date 14/01/28 | **QC inspector:** DAS 27 9-89<br>Date 14/1/28 | **Engineering Approval** (*if necessary*):<br>Date |

H:\FORMS\Quality Assurance\approved QA\Inspection sheet revA